ConquerHSC

Do. Believe. Conquer.

Student Name: _____

Student ID: _____

2019 Sample HSC Biology Paper #1

General Instructions

- **Reading Time - 5 minutes**
- **Working time - 3 hours**
- Please write using black pen.
- Draw diagrams using a pencil.
- NESA approved calculators are permitted.
- Please provide full working out in your responses to Section II questions.

Section I - 20 marks

Section II - 80 marks

Total Marks / 100

SECTION I

Question 1: In which of the following scenarios will a somatic mutation be passed onto offspring(s)?

(A) Meiosis
(B) Cloning
(C) Hybridisation
(D) Somatic mutation will not be passed onto offspring(s)

Question 2: Which of the statements below is incorrect about fungi?

(A) Fungi are eukaryotic organisms.
(B) Fungi are photosynthetic organisms.
(C) Fungi have rigid cell walls.
(D) Fungi can reproduce sexually and asexually.

Question 3: The following conditions are maintained by mammals except for

(A) Blood pH level
(B) Metabolic rate
(C) Blood glucose concentration
(D) Body temperature

Question 4: Suppose a DNA helix is comprised of 35% adenine, what the percentage composition of cytosine in the same helix?

(A) 75%
(B) 35%
(C) 15%
(D) 32.5%

Question 5: For a trait that has multiple alleles such as blood type, the gamete has how many alleles?

(A) One
(B) Two
(C) Three
(D) Four

Question 6: For the DNA strand that is written as 5′ ACG TAC 3′, the complementary DNA strand would have which of the following sequence?

(A) 5′ TGC ATG 3′
(B) 3′ TGC ATG 5′
(C) 3′ GTA CGT 5′
(D) 5′ GTA CGT 3′

Question 7: Which of the following cells are required for a maximum humoral response when an individual is exposed to an antigen for the first time?

(A) B lymphocytes only
(B) T cells only
(C) B cells and T cells only
(D) B cells, T cells and Dendritic Cells

Question 8: Which of the following terms refer to a genetic change that applies to more than 1% of the population?

(A) Chromosomal Mutation
(B) Point Mutation
(C) Polymorphism
(D) Frameshift Mutation

Question 9: You learned from the HSC Biology Course that the recessive gene located on human's X chromosome are always

(A) Lethal
(B) Exhibited by males
(C) Exhibited by females
(D) Not enough information is provided for a conclusive answer.

Question 10: Which of the following is not necessary for the transcription stage in Polypeptide Synthesis to occur?

(A) Ribosomes
(B) Nucleotides
(C) DNA
(D) Enzymes

Question 11: Which of the following name refers to a mutational event that is not caused by a known mutagen?

(A) Point Mutation
(B) Single Nucleotide Polymorphism
(C) Spontaneous Mutation
(D) Induced Mutation

Question 12: Which of the following is true about vaccination programs?

(A) They are used as a prevention strategy against infectious diseases
(B) They are used as a control strategy against infectious diseases
(C) They are mostly specifically used to treat infected individuals.
(D) Both (A) and (B) are correct.

Question 13: Which of the following most accurately defines the 'prevalence rate' for a particular disease?

(A) The total instance of a disease in a population at a given point in time over the total number of individuals in the population.
(B) The number of new instances of a disease in a population over a certain period of time.
(C) The number of new instances of a disease in a population in a given point in time over the same period of time.
(D) The total instance of a disease in a population at a given point in time out of the total number of individuals in the population whom are at risk.

Question 14: The following diagram shows the separation of DNA segments on an electrophoretic gel. The lanes labelled A and Z are for intact linear DNA segments of species A and Z who are closely related. The lanes labelled A' and Z' shows DNA segments after the same restriction enzyme is applied to them. Which of the following statements is correct for the below diagram?

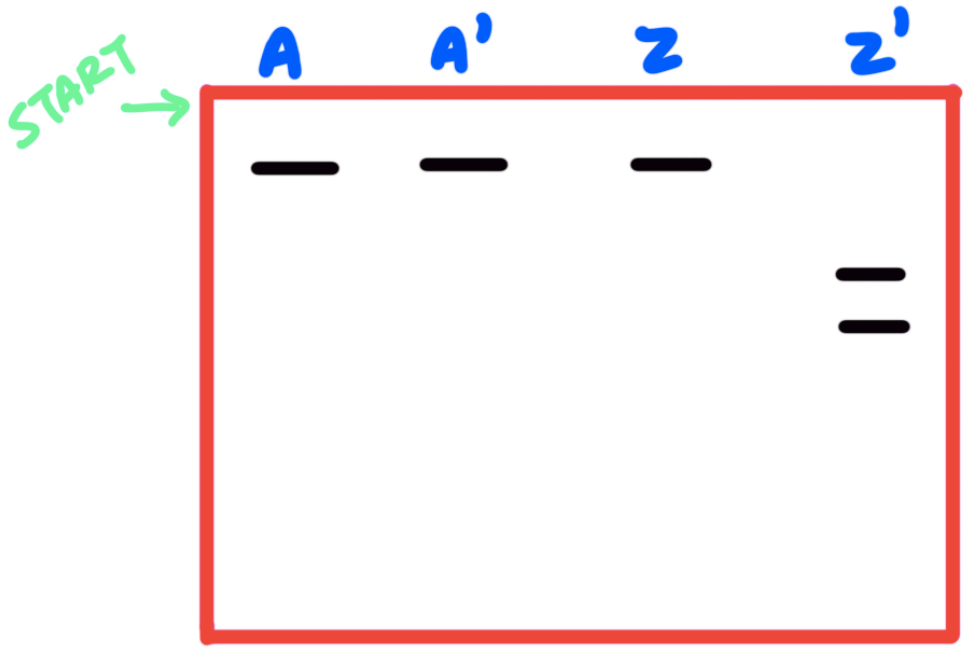

(A) Species Z has one restriction site for the enzyme and Species A has zero.
(B) There is an unequal amount of DNA between species A and Z
(C) There is no restriction site on for species Z's DNA.
(D) Species Z has two restriction sites for the enzyme and Species A has one.

Question 15: For the following pedigree, which of the following statements is correct?

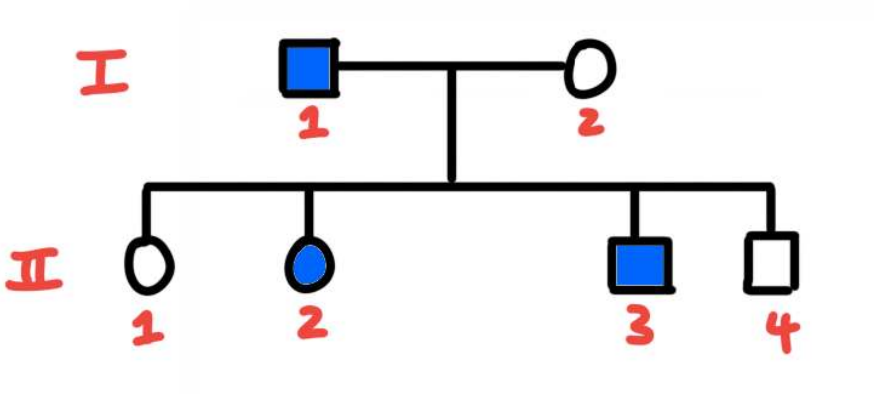

(A) The mother is heterozygous
(B) The father is homozygous dominant
(C) The trait is not sex-linked recessive
(D) None of the above.

Question 16: Suppose a scenario where two parents do not show signs of an inherited disease. The couple given birth to seven children out of which five of them were male and two of them were females. None of the 2 daughters were affected but 3 of the 5 sons were affected. Which of the following mode of inheritance is most likely for the inherited disease for the described situation?

(A) Sex-Linked Dominant
(B) Sex-Linked Recessive
(C) Autosomal Dominant
(D) Autosomal Recessive

Question 17: Gregor Mendel performed pure breed crossing involving pod and flower colour, stem height, location of flower on the plant and many more. These are called

(A) Alleles
(B) Genotype
(C) Phenotype
(D) All of the above

Question 18: Which of the following terms refer to hosts that harbour an infectious agent but does not exhibit any symptoms?

(A) Antibodies
(B) Vectors
(C) Carriers
(D) Antigens

Question 19: Which of the following is incorrect pertaining to epidemiology in general?

(A) Epidemiologist are interested in the methods to prevent and control diseases
(B) Epidemiologists are interested in the frequency and distribution of diseases
(C) Epidemiologists are interested in the cause and effect of diseases.
(D) Epidemiologists are interested only in the methods of preventing diseases and not control.

Question 20: Which of the following is the primary objective(s) of public health public health programs for infectious diseases?

(A) To prevent the occurrence of disease of uninfected individuals
(B) To prevent the occurrence of disease of infected individuals
(C) To prevent the transmission of disease from deceased individuals
(D) Both (A) and (B) are correct.

[SECTION II on NEXT PAGE]

SECTION II

Question 21: Evaluate the effectiveness of whole organism cloning and gene cloning. [6 marks]

Question 22: Compare the effects of point mutation and chromosomal mutation. [5 marks]

Question 23: Assess what data analysis revealed about population genetics relating to human evolution. [6 marks]

Question 24: Explain the responses of an Australian plant to a named pathogen. [5 marks]

Question 25: Assess the ethical implications of using biotechnology. [7 marks]

Question 26: List three components that is part of a named animal's innate immune response and describe each of their functions. [3 marks]

Question 27: Explain the interaction between cells involved in the adaptive immune system after an individual's primary exposure to a pathogen. [6 marks]

Question 28: Assess the importance for performing research into using genetic technologies. [7 marks]

Question 29: Construct a negative feedback loop to show how homeostasis for blood glucose level is maintained in mammals. [6 marks]

Question 30: Explain how the endocrine and nervous system help achieve homeostasis in humans. [8 marks]

Question 31: Explain the process and advantages of a named current genetic technology that is used to induce genetic change. [6 marks]

Question 32: Explain the causes and effects of diseases resulting from environmental exposure. [6 marks]

Question 33: Explain the difference between control and prevention, providing an example for each for a named disease. [4 marks]

Question 34: Explain the importance of recognising and protecting the intellectual property of indigenous people of Australia. [5 marks]

[END OF EXAM]